Denna handling får ej utan vårt medgivande delges annan, kopieras eller eljest obehörigen användas.
Överträdelse härvid beivras med stöd av gällande lag.
This document must not be copied, either completely or in part, without permission.
Any infringement will have legal consequences.

Diese Zeichnung darf weder ganz noch teilweise ohne unsere ausdrückliche Genehmigung kopiert oder auf andere Weise vervielfältig werden. Zuwiderhandlungen werden gerichtlich verfolgt.

Alla rättigheter förbehålls.
All rights reserved.
Alle rechte vorbehalten.

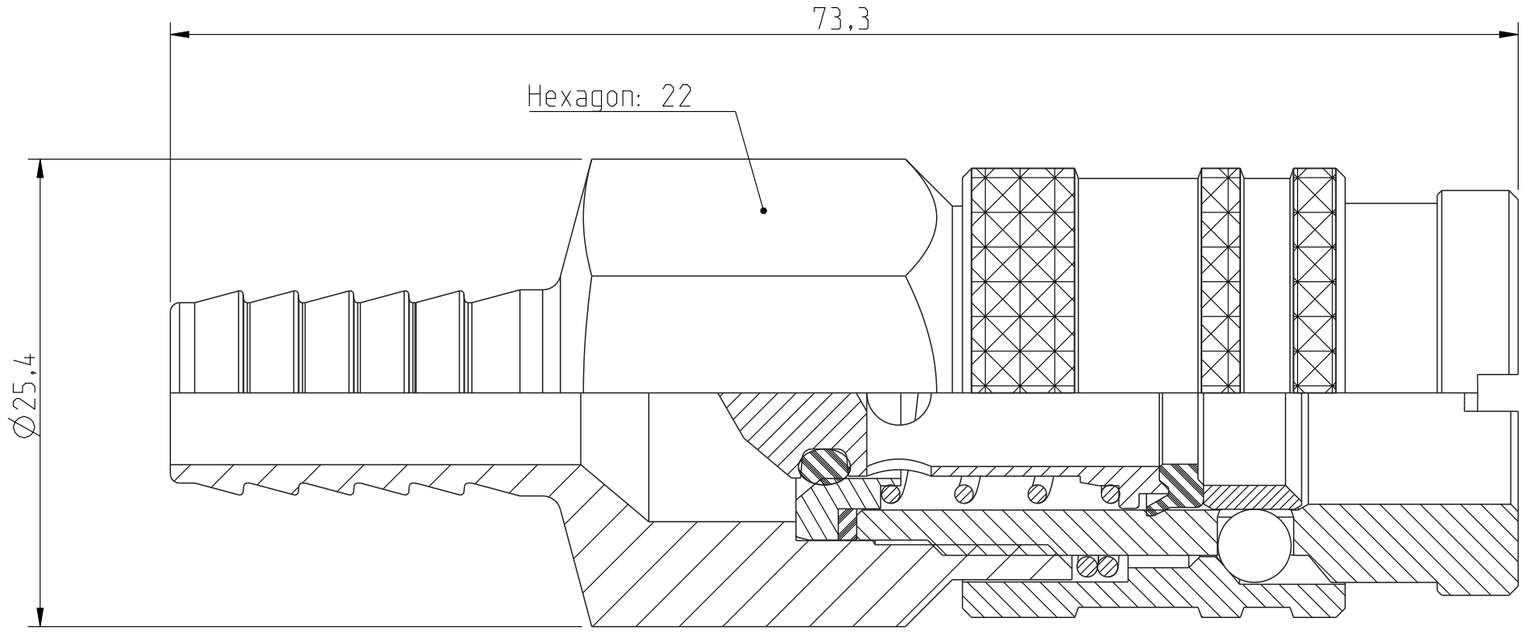

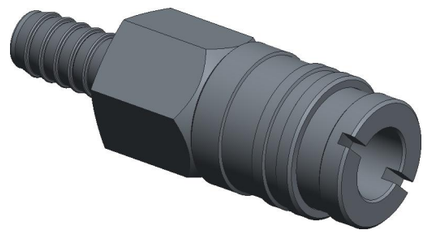

1:1

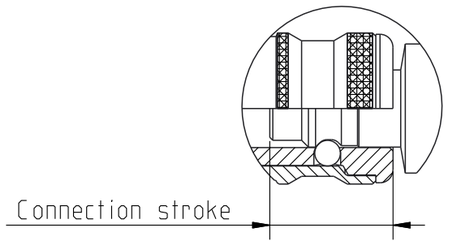

12	1	Valve seat	Acid proof stainless steel
11	1	Valve	Acid proof stainless steel
10	1	Spring	Stainless steel
9	1	Spring	Stainless steel
8	1	Ratchet sleeve	Acid-proof steel
7	1	O-ring	NBR
6	1	Locking sleeve	Acid proof stainless steel
5	1	Lip seal	NBR
4	1	Front part	Acid proof stainless steel
3	1	Flat seal	PA
2	6	Ball	Acid proof steel
1	1	Back part	Stainless steel
Detalj Item	Antal Quant.	Benämning Description	Material Material

Product no: 10_346_1034

Max working pressure:	35	bar connected
	35	bar disconnected
Min burst pressure:	140	bar connected
	140	bar disconnected
Sealing material:	NBR	
Temperatur range:	-30°C - +100 °C	
Nominal flow diameter,DN:	7.4	mm
Connection	Hose 3/8″ 10,0mm	
Connection stroke:	22.7	mm

Skala Scale	3:1	Ritad Drawn	PGu	Kontr. Checked	LHE	Godk. Appr.	JOOL	ÄM nr. Alt. no.	-	Dat. Date 150609

Assembly drawing

Ritning nr/Drawing No. 50_346_1034

Utg./Issue AA

A3