Denna handling för ej utan vårt medgivande delges annan, kopieras eller eljest obehörigen användas.
Överträdelse härvid beivras med stöd av gällande lag.
Diese Zeichnung darf weder ganz noch teilweise ohne unsere ausdrückliche Genehmigung kopiert oder auf andere Weise verveilfältig werden.
Zuwiderhandlungen werden gerichtlich verfolgt.
This document must not be copied, either completely or in part, without permission.
Any infringement will have legal consequences.
All rights reserved.
Alle rechte vorbehalten.

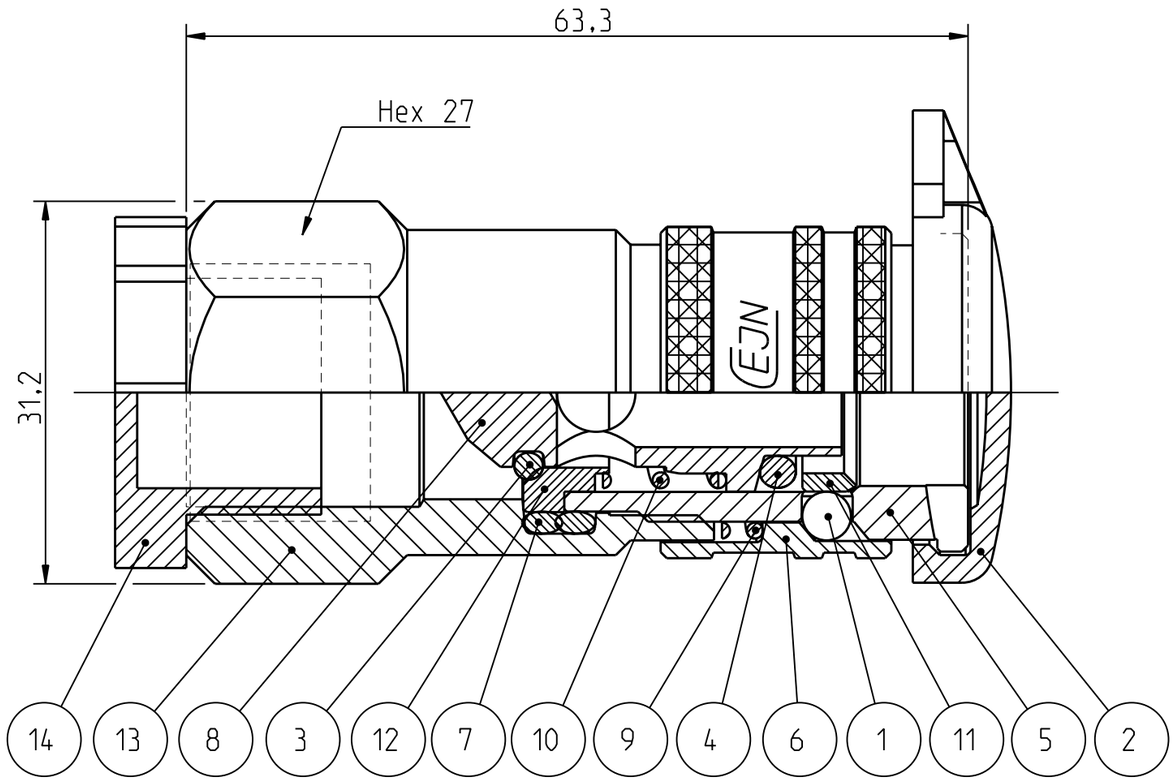

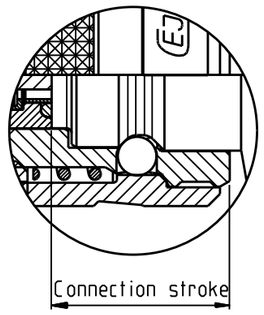

Detalj Item	Antal Quant.	Benämning Description	Material Material
14	1	Thread protection	Plastic
13	1	Back part	Acid-proof steel
12	1	Valve seat	Acid-proof steel
11	1	Ratchet sleeve	Acid-proof steel
10	1	Spring	Acid-proof steel
9	1	Spring	Acid-proof steel
8	1	Valve	Acid-proof steel
7	2	O-ring	NBR
6	1	Locking sleeve	Acid-proof steel
5	1	Front part	Acid-proof steel
4	1	O-ring	NBR
3	1	O-ring	NBR
2	1	Dust cap	Plastic
1	9	Ball	Acid proof steel

Product no.: 10_416_1205

Max working pressure:	35	bar connected
	35	bar disconnected
Min burst pressure:	140	bar connected
	140	bar disconnected
Sealing material:	NBR	
Temperatur range:	-30°C - +100 °C	
Nominal flow diameter,DN:	8.9	mm
Connection	G 1/2"	Fem
Connection stroke:	19.1	mm

Skala Scale 2:1	Ritad Drawn ChP	Kontr. Checked ÅM	Godk. Appr. AO	ÅM nr. Alt. no. –	Dat. Date 050425	
Assembly drawing		Ritning nr/Drawing No. 50_416_1205				Utg./Issue AA

A3