1 : 5

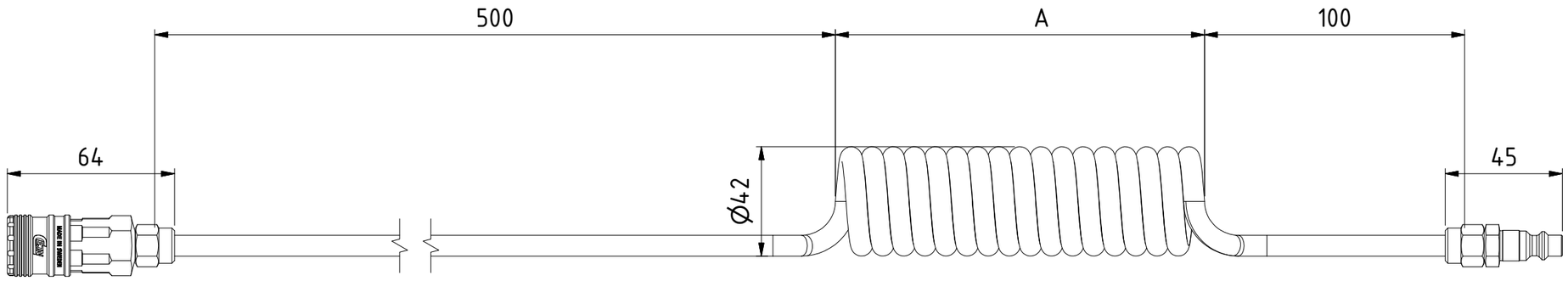

Techincal data:

Connections:	Coupling and Nipple series 310 eSafe
Max WP:	10 bar
Max BP:	25 bar
Temperatur range:	-20°C - +60°C

Hose kit spiral 5x8 with series 310 eSafe		
Art. no.	Hose working length [m]	Dimension A [mm]
19 958 9220	2	142
19 958 9234	4	330

Scale	Drawn	Checked	Appr.	ECO	Date
1 : 2	CABANLA	LHE	JOOL		2018-10-02

Assembly Drawing	Drawing No.	Issue	Sheet
	509580003	AA	1 /(1)

A3

This document must not be copied, either completely or in part, without permission. Any infringement will have legal consequences © All rights reserved