Denna handling får ej utan vårt medgivande delges annan, kopieras eller eljest obehörigen användas.
Överträdelse härvid beivras med stöd av gällande lag.
This document must not be copied, either completely or in part, without permission.
Any infringement will have legal consequences.

Diese Zeichnung darf weder ganz noch teilweise ohne unsere ausdrückliche Genehmigung kopiert oder auf andere Weise vervielfältig werden.
Zuwiderhandlungen werden gerichtlich verfolgt.

Alla rättigheter förbehålls.
All rigths reserved.
Alle rechte vorbehalten.

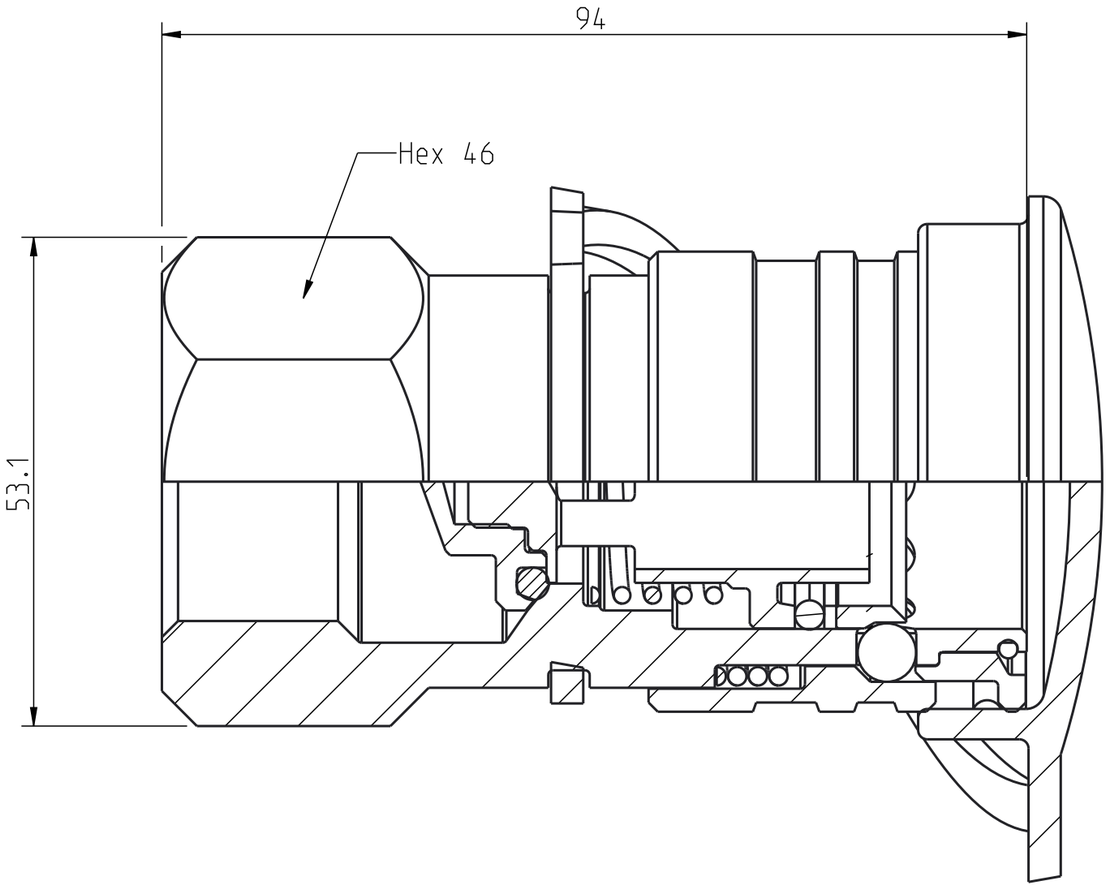

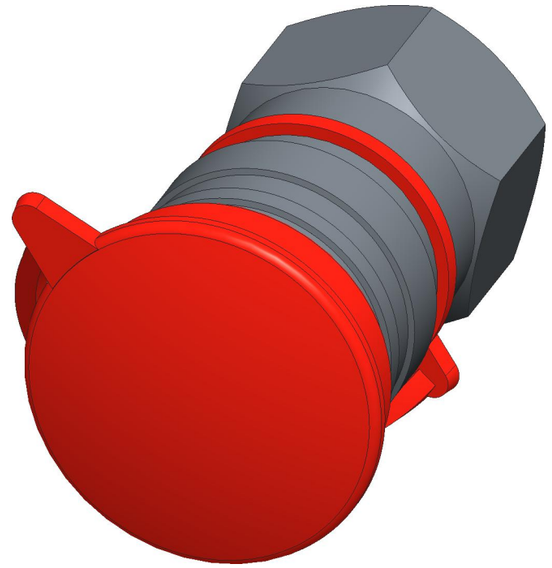

1:1

Product no: 10_706_1213		
Max working pressure:	35	bar connected
	35	bar disconnected
Min burst pressure:	140	bar connected
	140	bar disconnected
Sealing material:	FPM	
Temperatur range:	-15 °C - +205 °C	
Nominal flow diameter,DN:	19	mm
Connection	G 1" Fem	
Connection stroke:	35	mm

Detalj Item	Antal Quant.	Benämning Description	Material Material
14	1	Valve	Stainless steel
13	1	Valve nut	Stainless steel
12	1	Stop flange	Stainless steel
11	1	Spring	Stainless steel
10	1	Spring	Stainless steel
9	1	Ratchet sleeve	Stainless steel
8	1	O-ring	FPM
7	1	O-ring	FPM
6	1	Locking sleeve	Stainless steel
5	1	Lock ring	Stainless steel
4	1	Dust cap	Plastic
3	1	Coupling body	Stainless steel
2	12	Ball	Acid proof steel
1	1	Back up ring	Plastic

Skala Scale	Ritad Drawn	Kontr. Checked	Godk. Appr.	ÄM nr. Alt. no.	Dat. Date
3:2	JOJ	–	–	–	140203

Assembly drawing

Ritning nr/Drawing No.: 50_706_1213

Utg./Issue: AA

A3