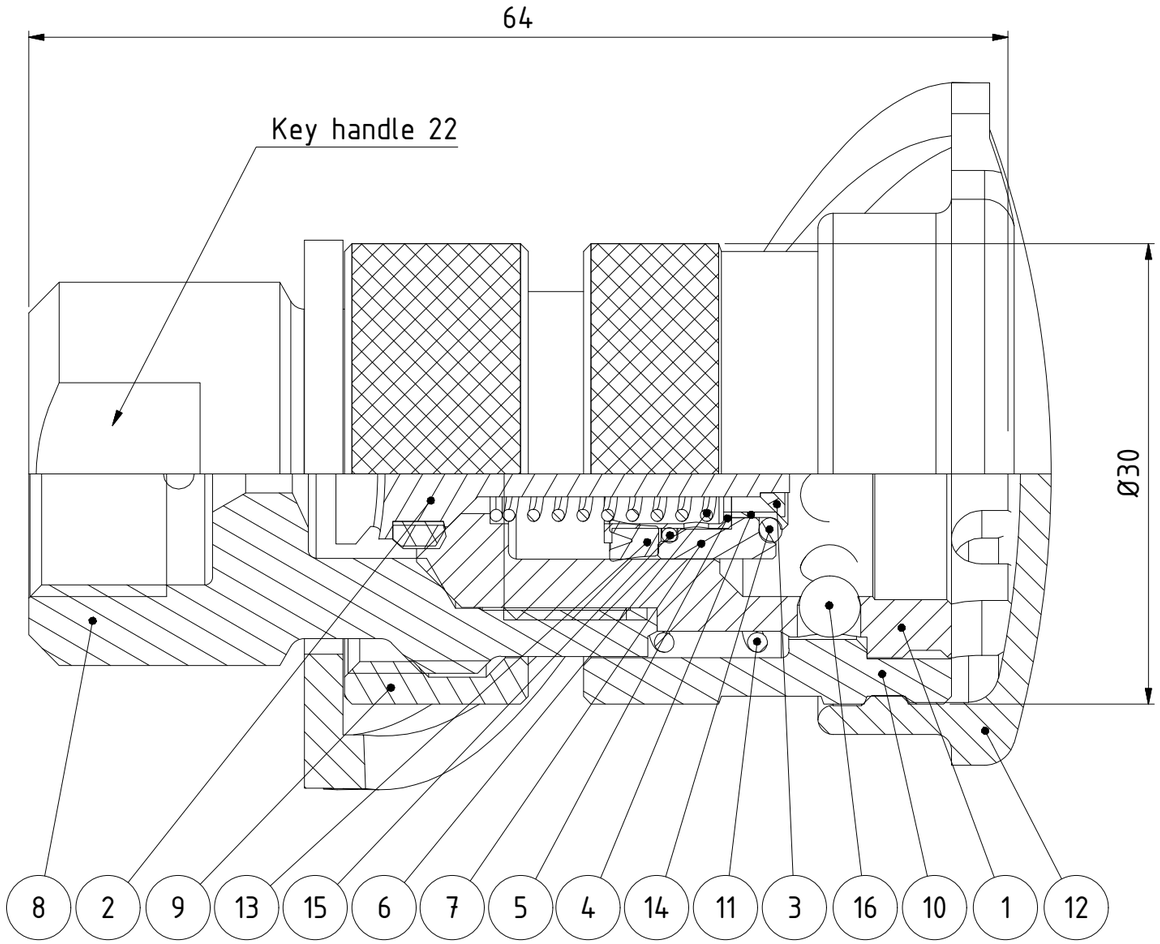

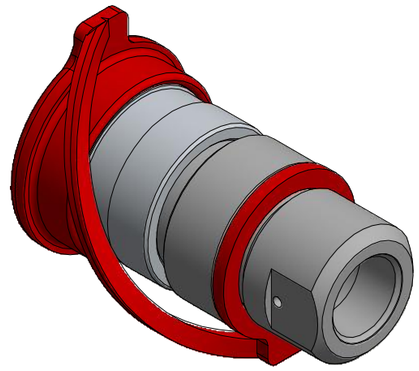

1 : 1

Item	Qty	Description	Material
16	9	Ball	Stainless steel
15	1	O-ring	NBR
14	1	O-ring	NBR
13	1	Lip seal	NBR
12	1	Dust cap	Plastic
11	1	Spring	Stainless steel
10	1	Locking sleeve	Hard. steel, Zn 8 silver
9	1	Locking ring	Steel, Zn 8 Silver
8	1	Back part	Steel, black finished
7	1	Expansion sleeve	Plastic
6	1	Spring	Steel
5	1	Spring housing	Steel
4	1	O-ring sleeve	Steel
3	1	Washer	Steel
2	1	Valve	Steel FeZn5/ NBR
1	1	Front part	Steel, Black finished

Product No. 101351505

Nominal flow Ø DN:	2.5 mm
Connection Stroke:	20.6 mm
Max WP Connected:	3000 bar
Max WP Disconnected:	3000 bar
Min BP Connected:	6000 bar
Min BP Disconnected:	6000 bar
Max no. of pressure cycles:	1000 to swiveling nipple 5000 to non swiveling nipple
Temperature range:	-20°C - +80°C
Connection:	M16x1.5 Fem. 60° sealing cone
Sealing material:	NBR
Hexagon:	22

Scale	Drawn	Checked	Appr.	ECO	Date
5:2	CABAO	FR	JE	11609	2017-11-20

Assembly Drawing	Drawing No.	Issue	Sheet
	501351505	AB	1 /(1)

A3

This document must not be copied, either completely or in part, without permission. Any infringement will have legal consequences ©
All rights reserved