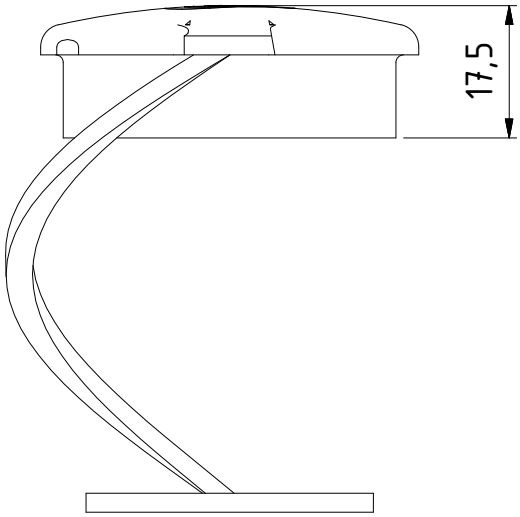

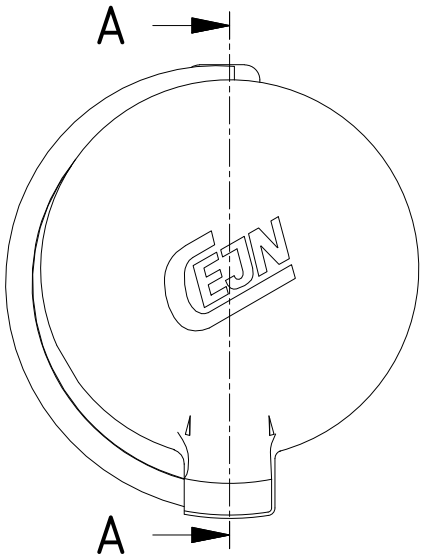

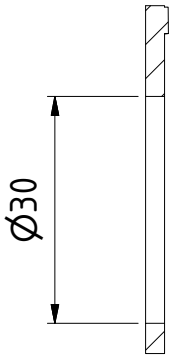

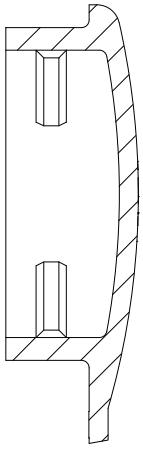

A-A

Item	Qty	Description	Material	Part Number
1	1	Dust cap	Black PVC	095651000

Scale	Drawn	Checked	Appr.	ECO	Date
1 : 1	PeOd			12380	

Assembly Drawing	Drawing No.	Issue	Sheet
	505651000	AA	1 /(1)

A4

All rights reserved

This document must not be copied, either completely or in part, without permission. Any infringement will have legal consequences ©