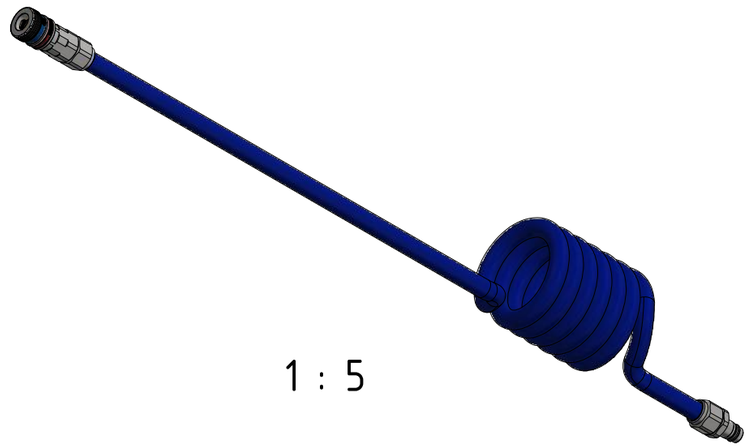

1 : 5

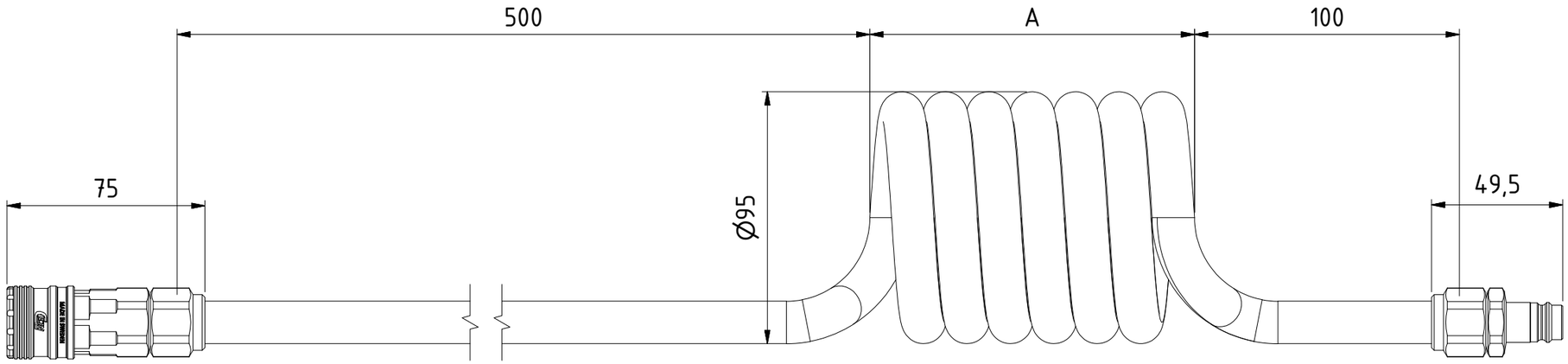

Techincal data:

Connections:	Coupling and Nipple series 410 eSafe
Max WP:	10 bar
Max BP:	25 bar
Temperatur range:	-20°C - +60°C

Hose kit spiral 11x16 with series 410 eSafe		
Art. no.	Hose working length [m]	Dimension A [mm]
19 958 9485	2	123
19 958 9486	4	284
19 958 9487	6	445
19 958 9488	8	606

Scale	Drawn	Checked	Appr.	ECO	Date
1 : 2	CABANLA	LHE	JOOL		2018-11-21

	Drawing No.	Issue	Sheet
Assembly Drawing	509580014	AA	1 /(1)

A3

This document must not be copied, either completely or in part, without permission. Any infringement will have legal consequences © All rights reserved