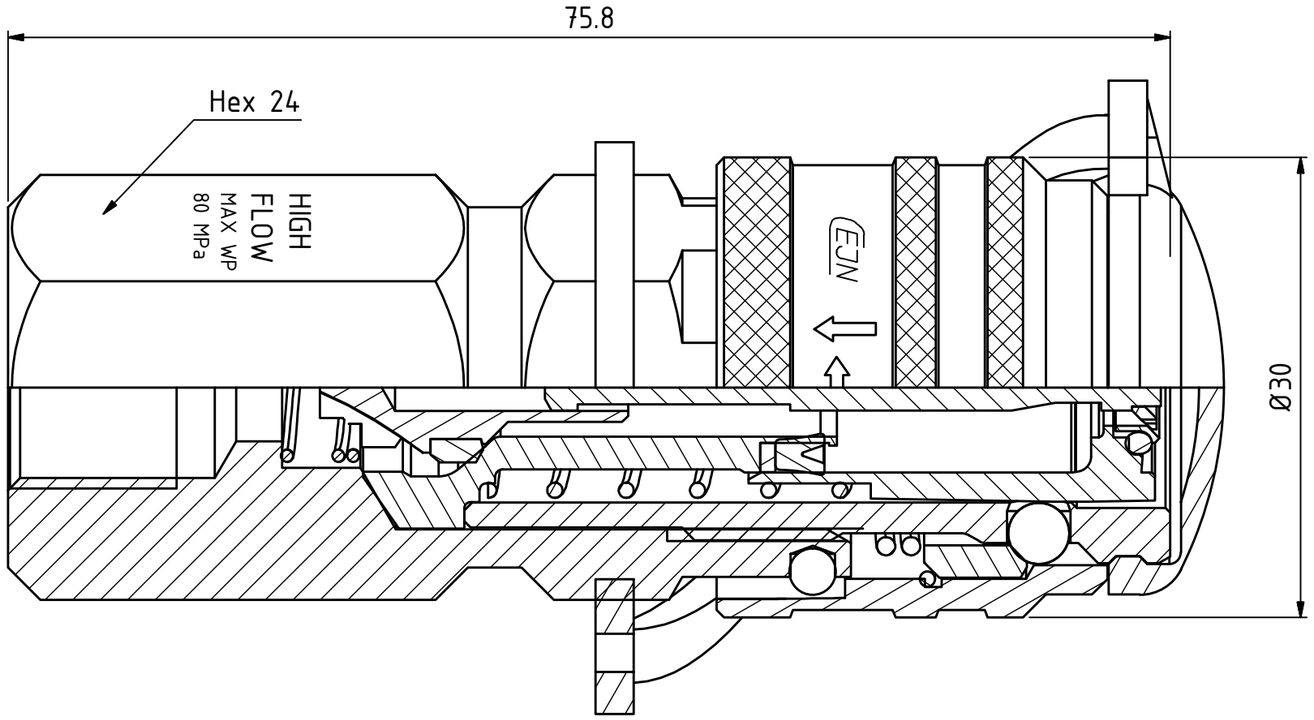

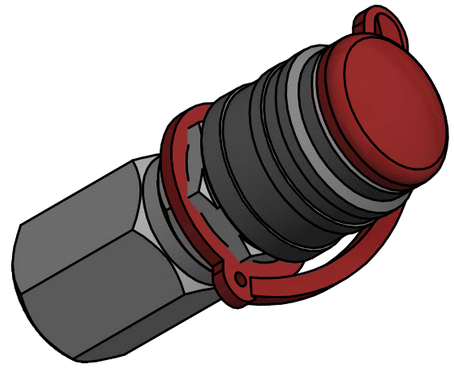

1 : 1

Item	Qty	Description	Material
20	1	Spring	Stainless steel
19	1	Valve	Steel FeZn5 / NBR
18	1	Valve seat	Steel
17	1	Spring	Steel
16	1	Ratchet sleeve	Steel, FeZn5
15	9	Ball	Stainless steel
14	1	O-ring	NBR
13	1	O-ring sleeve	Stainless steel
12	1	Washer	Steel
11	1	Pin	Steel
10	1	Spring	Steel
9	1	Lip seal	NBR
8	1	Back-up ring	POM
7	1	Ball	Stainless steel
6	1	Back part	Steel, Zn 8 silver
5	1	Wire coil	Steel
4	1	Locking sleeve	Steel, FeNib5
3	1	Locking sleeve	Hardened steel
2	1	Dust cap	Plastic
1	1	Front part	Steel, Zn 8 Silver

Product No. 101152202

Nominal flow Ø DN:	4 mm
Connection Stroke:	18.3 mm
Max WP Connected:	800 bar
Max WP Disconnected:	800 bar
Min BP Connected:	2400 bar
Min BP Disconnected:	2400 bar
Temperature range:	-30°C - +100°C
Connection:	G 1/4" Fem
Sealing material:	NBR
Hexagon:	24

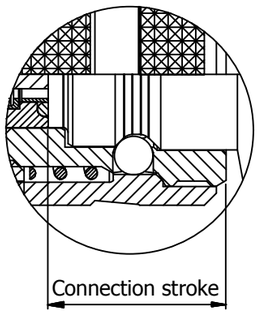

10 bar = 1 MPa

Scale	Drawn	Checked	Appr.	ECO	Date
5 : 2	CABAO	JE	JE	11580	2017-01-23

Assembly Drawing

Drawing No. 501152202

Issue AC

Sheet 1 /(1)

A3

This document must not be copied, either completely or in part, without permission. Any infringement will have legal consequences © All rights reserved