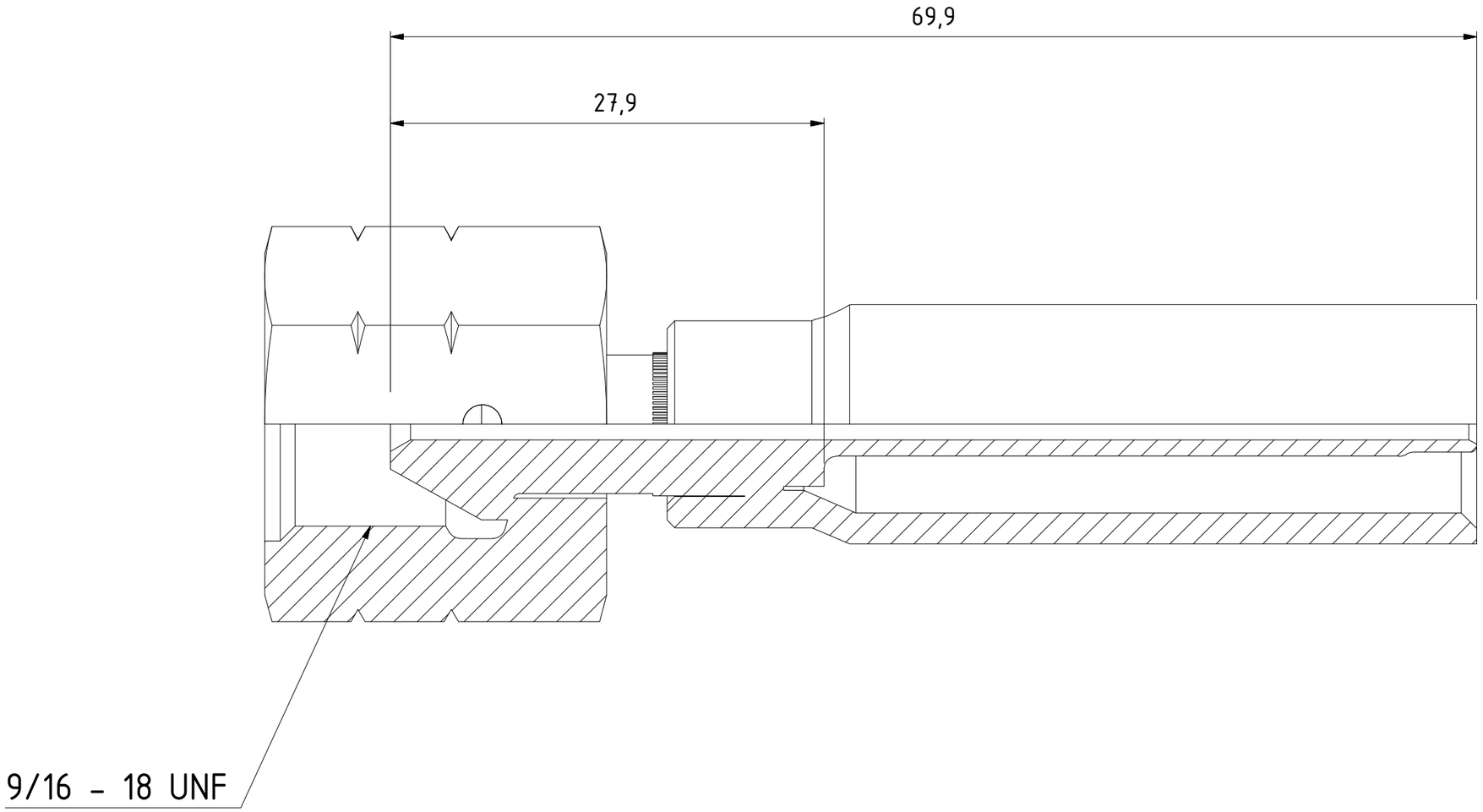

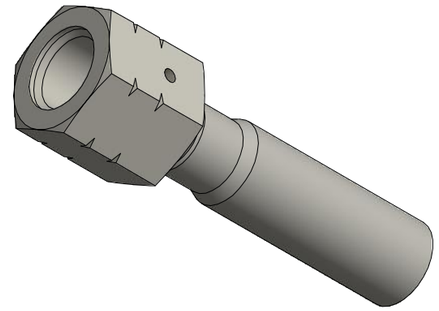

1 : 1

This document must not be copied, either completely or in part, without permission. Any infringement will have legal consequences © All rights reserved

Scale	Drawn	Checked	Appr.	ECO	Date
3: 1	CABANLA	CABEP7	CABLHE		2017-10-27

	Drawing No.	Issue	Sheet
Assembly Drawing	199513030	AA	1 /(1)

A3