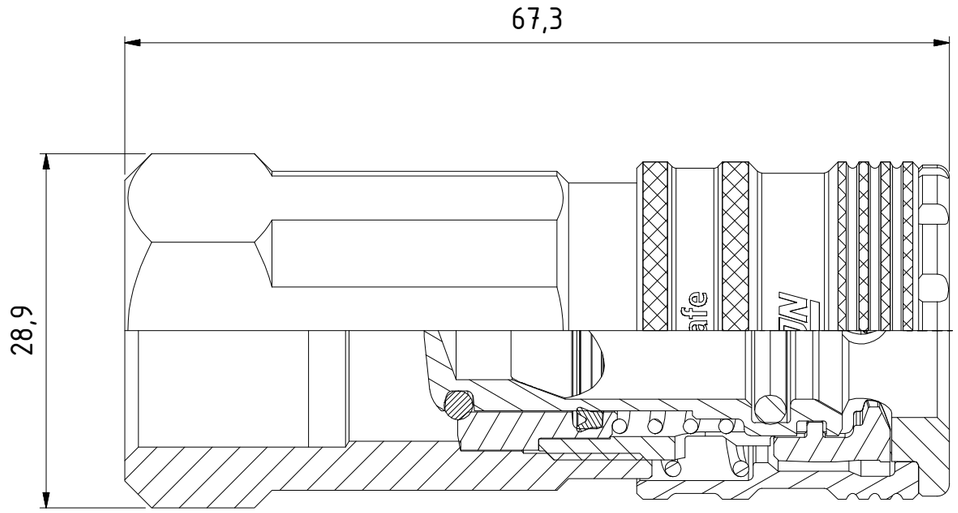

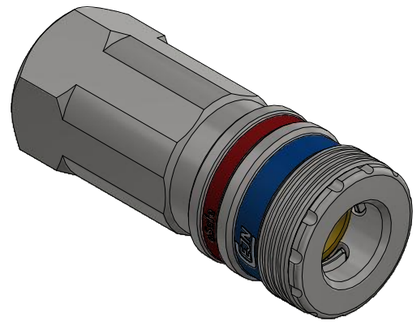

1 : 1

Product No.	103812205
Nominal flow Ø DN:	8 mm
Connection Stroke:	29,3 mm
Max WP Connected:	16 bar
Min BP Connected:	140 bar
Temperature range:	-20°C - +100°C
Connection:	G 1/2" Female
Sealing material:	NBR
Hexagon:	25

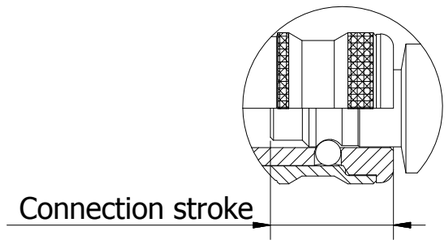

Item	Qty	Description	Material
11	1	Valve seat	Brass
10	1	Valve	Brass
9	1	Spring	Stainless Steel
8	1	Spring	Stainless steel
7	1	O-ring	NBR
6	1	O-ring	NBR
5	1	Locking sleeve	Hard. Steel, Zn 8 silver
4	1	Lip seal	NBR
3	3	Hook	Hard. Steel, Zn-Ni 8 transp.
2	1	Front part	Hard. Steel Zn 8 Silver
1	1	Back part	Steel, Zn 8 Silver

Scale	Drawn	Checked	Appr.	ECO	Date
2 : 1	PGU	LHE	JOOL		2017-06-14

Assembly Drawing	Drawing No.	Issue	Sheet
	503812205	AA	1 /(1)

A3

This document must not be copied, either completely or in part, without permission. Any infringement will have legal consequences © All rights reserved