Denna handling får ej utan vårt medgivande delges annan, kopieras eller eljest obehörigen användas.
Överträdelse härvid beivras med stöd av gällande lag.
This document must not be copied, either completely or in part, without permission.
Any infringement will have legal consequences.

Diese Zeichnung darf weder ganz noch teilweise ohne unsere ausdrückliche Genehmigung kopiert oder auf andere Weise verveilfältig werden.
werden. Zuwiderhandlungen werden gerichtlich verfolgt.

Alla rättigheter förbehålls.
All rigths reserved.
Alle rechte vorbehalten.

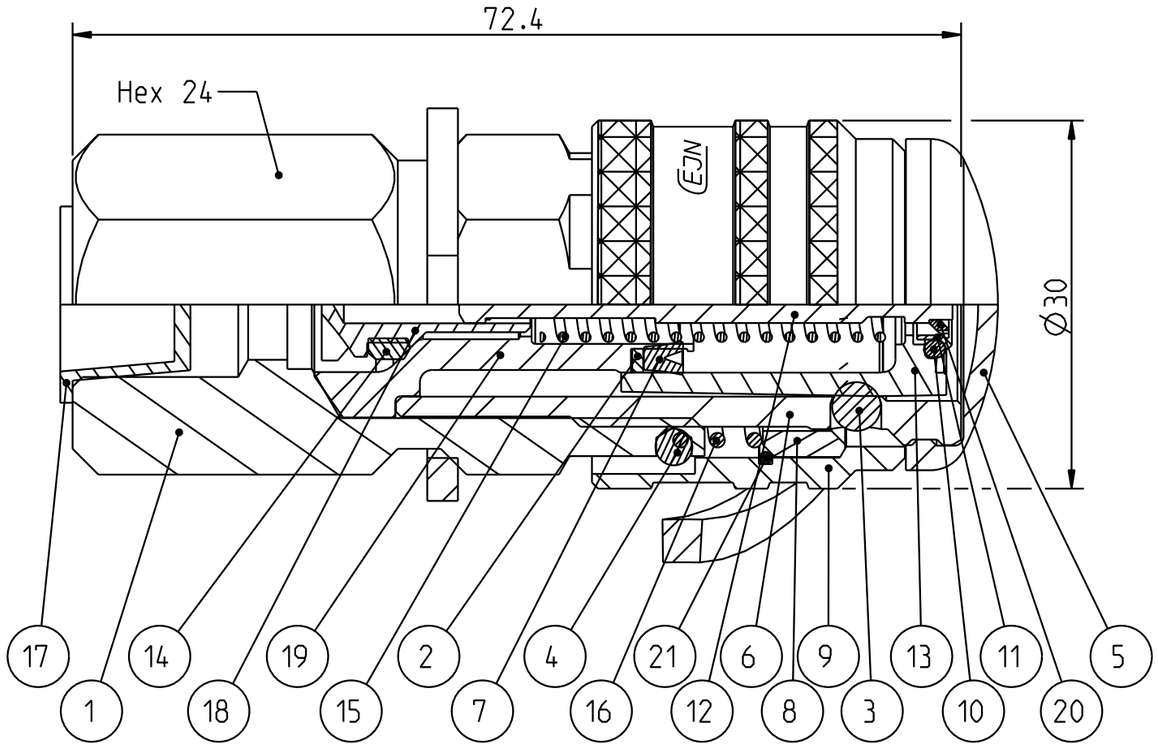

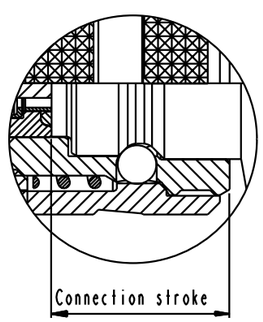

Product no: 10_116_1219		
Max working pressure:	1500	bar connected
	1500	bar disconnected
Min burst pressure:	3000	bar connected
	3000	bar disconnected
Sealing material:	NBR	
Temperatur range:	-30°C - +100 °C	
Nominal flow diameter,DN:	2.5	mm
Connection	G 1/4"	Fem
Connection stroke:	17.3	mm

Detalj Item	Antal Quant.	Benämning Description	Material Material
21	1	Wire coil	Steel
20	1	Washer	Steel
19	1	Valve seat	Steel
18	1	Valve	Steel, FeZn5
17	1	Thread protection	Plastic
16	1	Spring	Stainless steel
15	1	Spring	Stainless steel
14	1	Seal	NBR
13	1	Ratchet sleeve	Hard. steel, FeZn5
12	1	Pin	Steel
11	1	O-ring sleeve	Steel
10	1	O-ring	NBR
9	1	Locking sleeve	Steel, FeZn5 c black
8	1	Locking sleeve	Hardened steel
7	1	Lip seal	NBR
6	1	Front part	Steel, FeZn5 c 1A
5	1	Dust cap	Plastic
4	1	Ball	Stainless steel
3	9	Ball	Stainless steel
2	1	Back-up ring	POM
1	1	Back part	Steel *

Skala Scale	Ritad Drawn	Kontr. Checked	Godk. Appr.	ÄM nr. Alt. no.	Dat. Date
2:1	MJ	JE	RE		100105

Assembly drawing	Ritning nr/Drawing No.	Utg./Issue
	50_116_1219	AB

A3