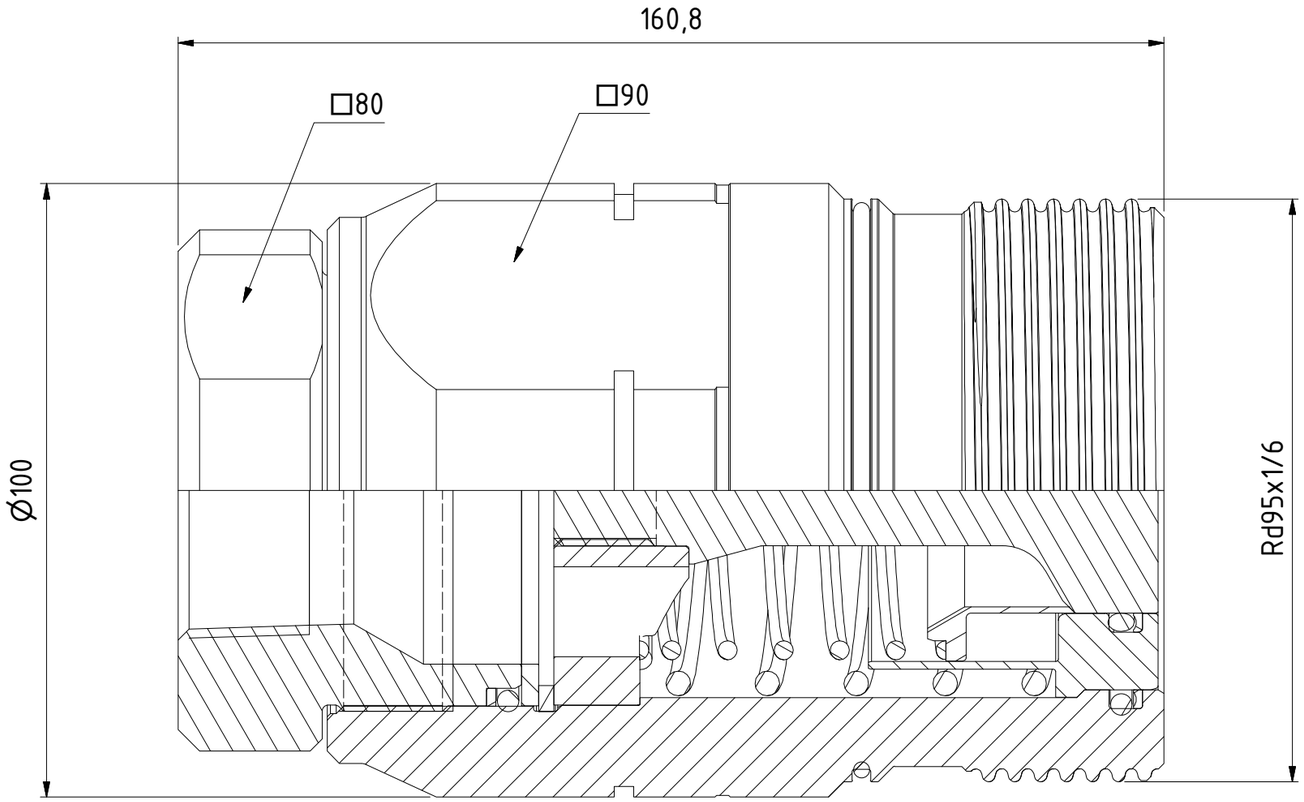

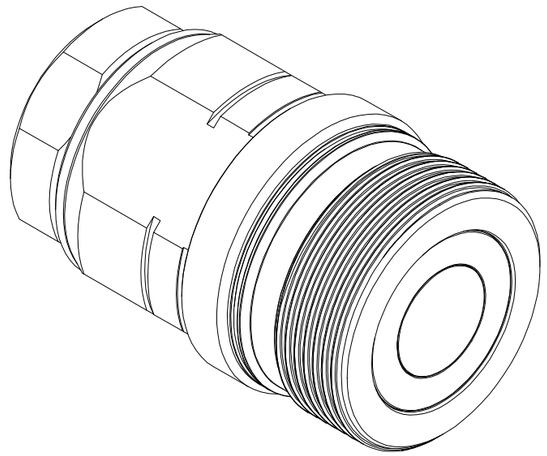

Item	Qty	Description	Material	Part Number
14	1	Back-up	PTFE	099075602
13	1	O-ring	NBR	099842803
12	1	O-ring	NBR	099072803
11	1	O-ring	NBR	099072804
10	1	O-ring	NBR	099072805
9	1	Back-up ring	PTFE+Bronze	099075600
8	1	Back-up ring	PTFE+Bronze	099075601
7	1	Back part	Steel, Zn-Ni transp	099074315
6	1	Retaining ring	Steel	099073300
5	1	Washer	Steel	099071400
4	1	Semi A. valve package		099079005
3	1	Spring	Steel	099073200
2	1	Valve	Steel, Zn-Ni transp.	099073000
1	1	Coupling body	Hardened steel, Zn-Ni	099075300

Product No. 109071105

Nominal flow Ø DN:	32 mm
Connection Stroke:	mm
Max WP Connected:	380 bar
Max WP Disconnected:	380 bar
Min BP Connected:	1520 bar
Min BP Disconnected:	1000 bar
Temperature range:	-30°C - +100°C
Connection:	Rc 1 1/2"
Sealing material:	NBR
Hexagon:	

Scale	Drawn	Checked	Appr.	ECO	Date
1 : 1	CABJOER	MBA	PMB	11812	2017-08-18

Assembly Drawing

Drawing No. 509071105

Issue AA

Sheet 1 /(1)

A3

This document must not be copied, either completely or in part, without permission. Any infringement will have legal consequences ©
All rights reserved