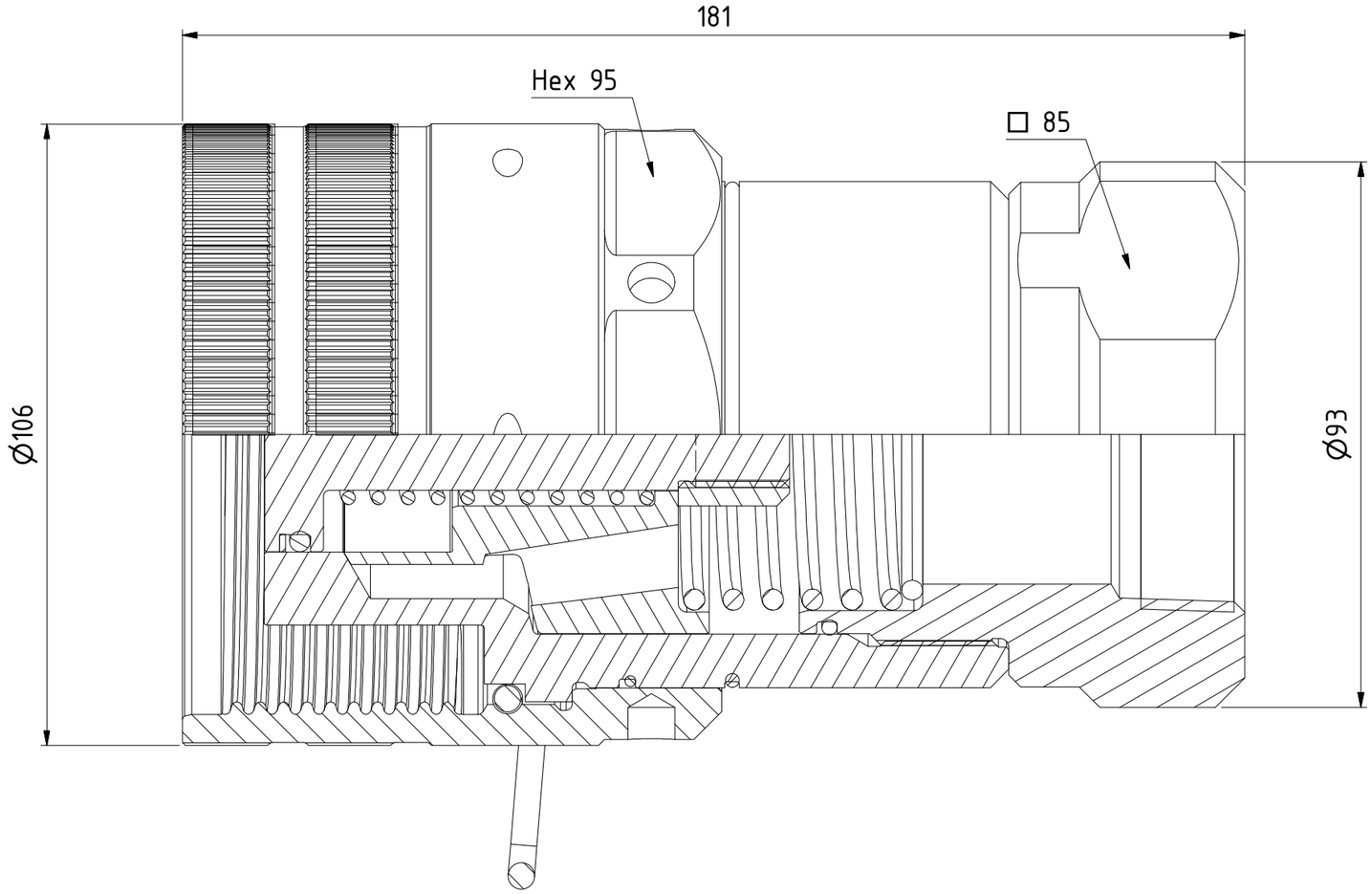

A-A

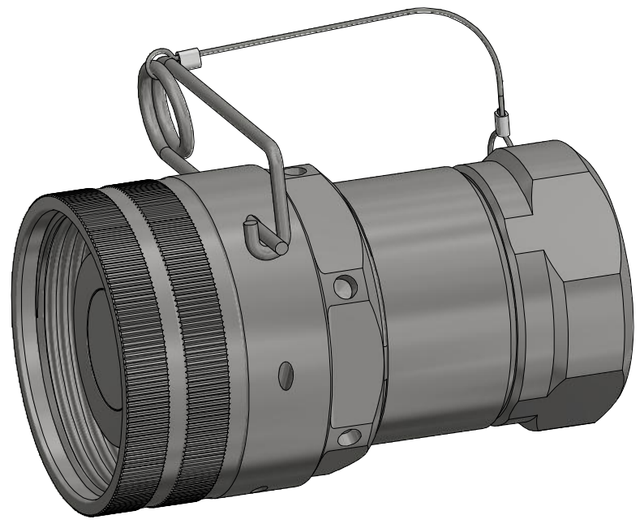

Item	Qty	Description	Material	Part Number
9	1	Semi A. Valve		099079002
8	1	Semi A. Lock. pin + wire		099079000
7	1	Semi A. Nipple Body		099079001
6	1	O-ring	NBR	099072802
5	1	Wire coil	Stainless steel	099072600
4	1	O-ring	NBR	099072801
3	1	Spring	Stainless steel	099073250
2	1	Back part	Steel, Zn-Ni transp.	099077347
1	1	Locking sleeve	Steel, Zn-Ni transp	099072500

Product No. 109076407

Nominal flow Ø DN:	32 mm
Connection Stroke:	mm
Max WP Connected:	380 bar
Max WP Disconnected:	380 bar
Min BP Connected:	1520 bar
Min BP Disconnected:	1000 bar
Temperature range:	-30°C - +100°C
Connection:	2" NPT
Sealing material:	NBR
Hexagon:	

Scale	Drawn	Checked	Appr.	ECO	Date
1 : 1	CABJOER	MBA	PMB	11812	2017-08-15

Assembly Drawing

Drawing No. 509076407

Issue AA

Sheet 1 /(1)

A3

This document must not be copied, either completely or in part, without permission. Any infringement will have legal consequences © All rights reserved